MOTOPLASTIC, S.A.
Molí de la sal, 1 - 08403 Granollers (Barcelona) SPAIN
Tel. 34 93 849 06 33 - Fax 34 93 849 09 88
info@puig.tv - info@puigusa.com
www.puig.tv - www.puigusa.com

INSTRUCCIONES DE MONTAGE – MOUNTING INSTRUCTIONS – MONTAGEANLEITUNG

GUARDABARROS TRASERO ADAPTABLE A - REAR MUDGUARD ADAPTABLE TO - HINTERRADABDECKUNG FÜR

BMW F800GT 13'-

Ref.: 6447

1

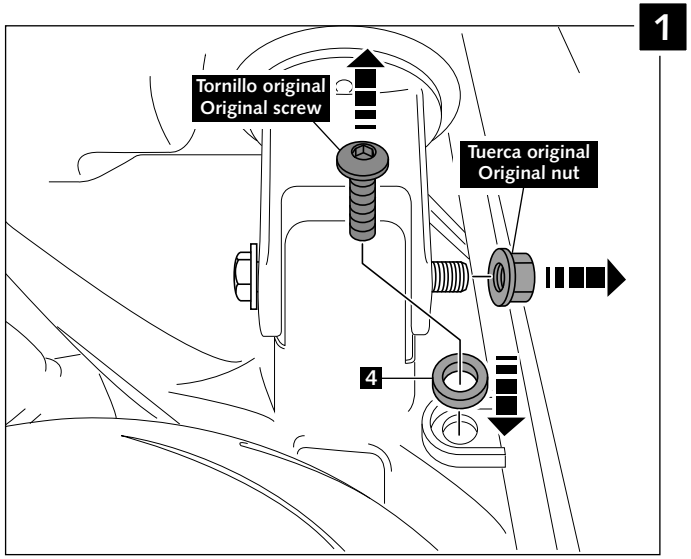

2

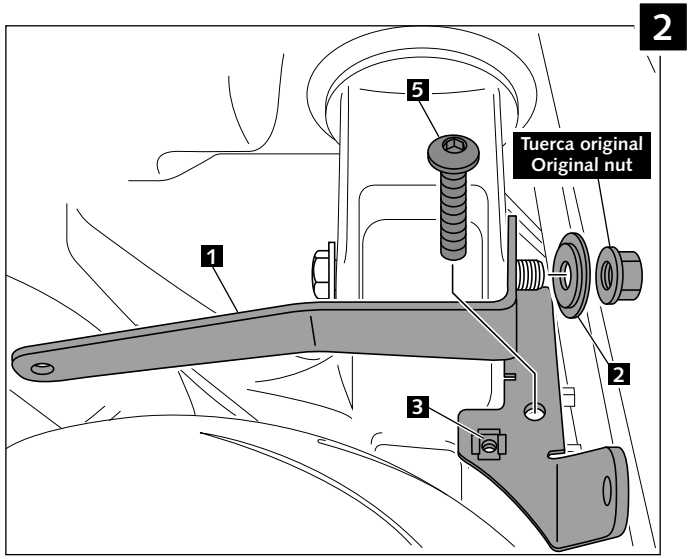

3

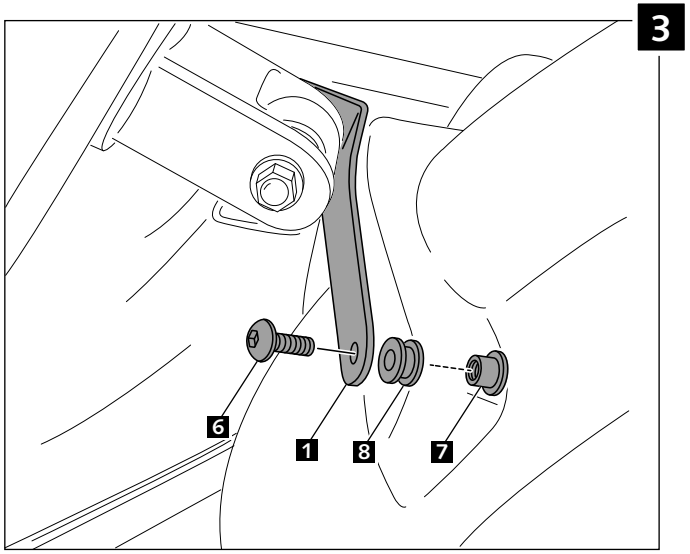

4

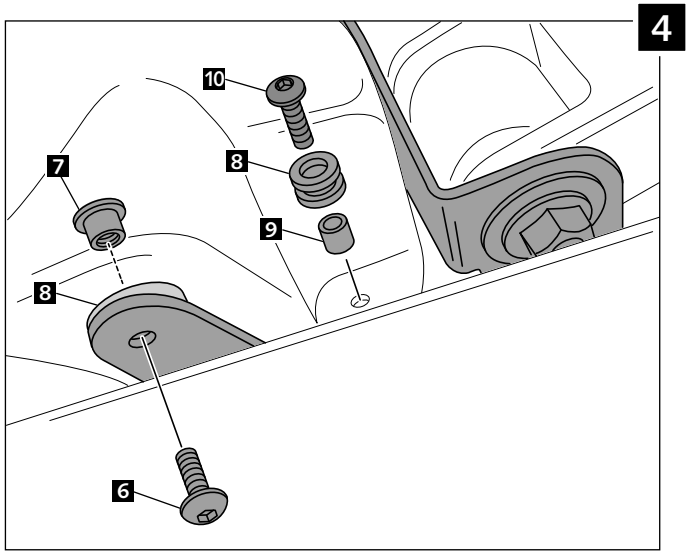

ID.	DESCRIPCIÓN	DESCRIPTION	BEZEICHNUNG	QTY.
1	Herraje	Hardware	Halter	1
2	Arandela metálica Ø33x3,9	Metal washer Ø33x3,9	Metallscheibe Ø33x3,9	1
3	Tuercas enjaulada M6	M6 insidenuts	Innenmutter	1
4	Casquillo metálico Ø16x3	Metal arrowhead Ø16x3	Metallbuchse Ø16x3	1
5	Tornillo M6x25 DIN1001	Screw M6x25 DIN1001	Schraube M6x25 DIN1001	1
6	Tornillo M5x15 DIN1001	Srew M5x15 DIN1001	Schraube M5x15 DIN1001	2
7	Casquillo silenblock con rosca interior	Metal arrowhead with thread	Silent Block Buchse mit Innengewinde	2
8	Silenblocks	Wellnuts	Silent Block	3
9	Casquillo silenblock Ø9x7	Metal arrowhead Ø9x7	Silent Block Buchse Ø9x7	1
10	Tornillo M6x15 DIN1001	Screw M6x15 DIN1001	Schraube M6x15 DIN1001	1

Created by: www.ciandissenyo.com